2R1040 (20 KVA)

REV	DESCRIPTION
01	NEW RELEASE

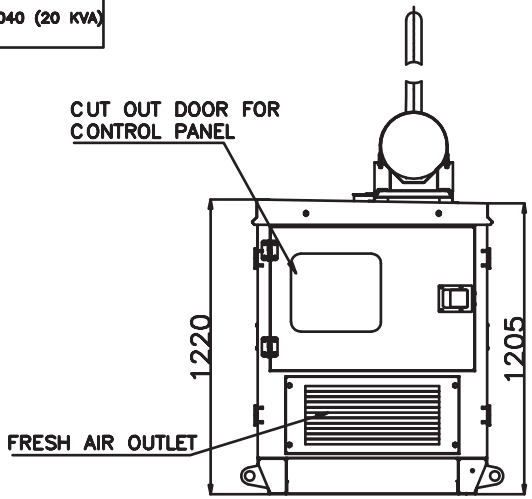

VIEW FROM ALTERNATOR SIDE

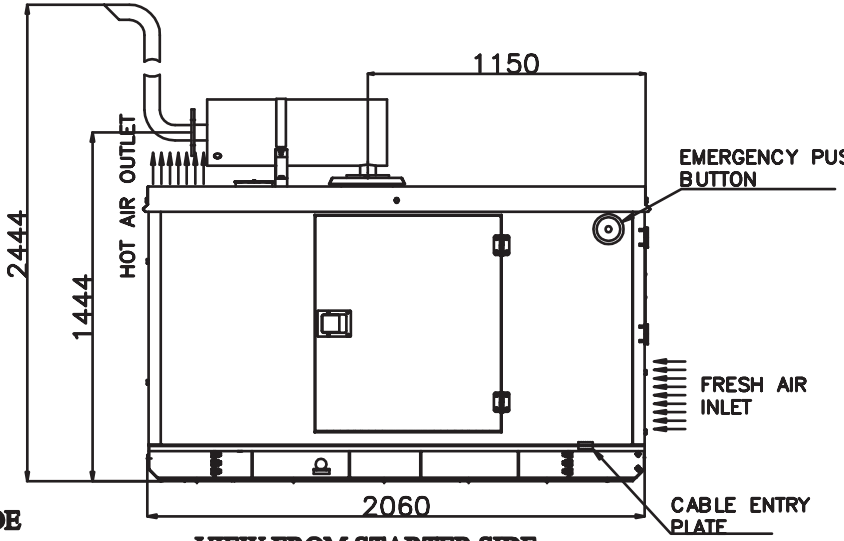

VIEW FROM STARTER SIDE

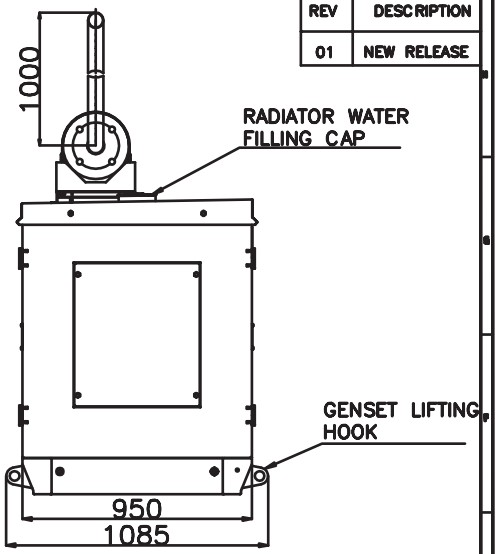

VIEW FROM GEAR SIDE

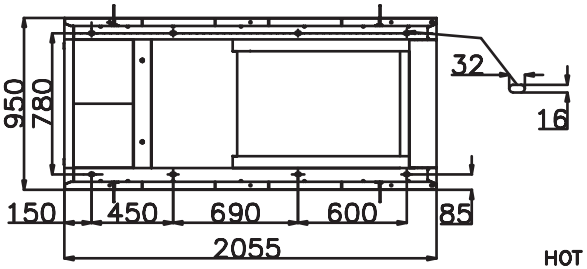

FOUNDATION LAYOUT

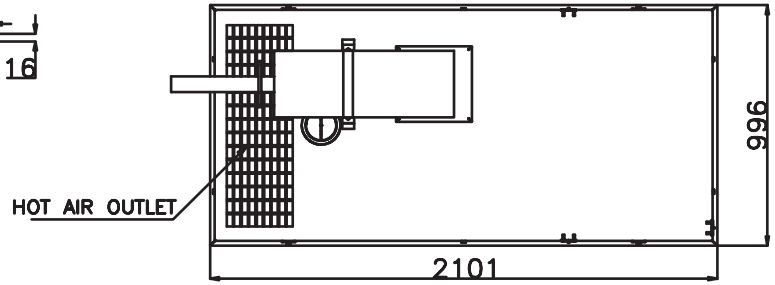

VIEW FROM TOP

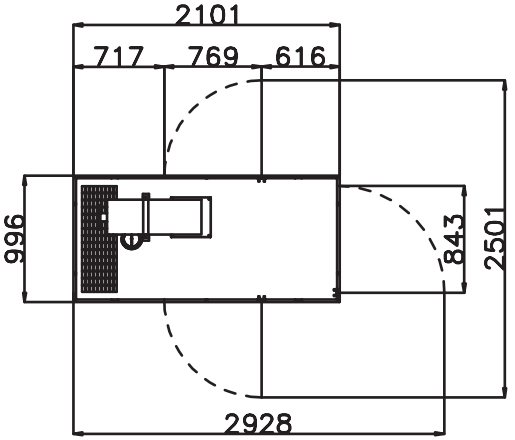

INSTALLATION PLAN FOR OPEN DOOR

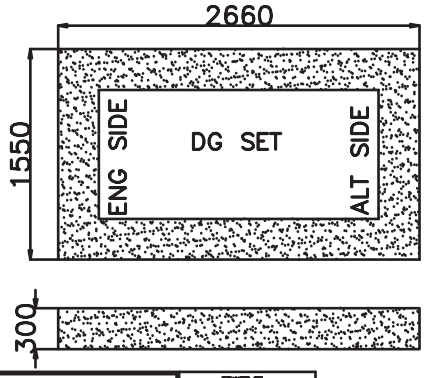

NOTES:

1. FUEL TANK CAPACITY: 65 LITRES.
2. HEIGHT OF FOUNDATION ABOVE FFL CAN BE MODIFIED DEPENDING UPON WATER STAGNATION.
3. DEPTH BELOW FFL DEPEND UPON THE SOIL CONDITION.
4. APPOX DEPTH BELOW FFL = 500MM.
5. PPC OR RCC SHALL BE BASED ON SOIL CONDITION.
6. LENGTH OF THE GENSET = 2101MM (6.89ft).
7. WIDTH OF THE GENSET =996MM (3.26ft).
8. HEIGHT OF THE GENSET =2444MM (8.01ft).

IF IN DOUBT ASK

LIFECYCLE STATE: RELEASED

DR.	D.PRAKASH
CHK.	T.MARUNKUMAR
DATE	6.5.07.2014

2R1040 GENSET LAYOUT
20 KVA

TYPE 2R1040

SUNBEAM GENERATORS PVT.LTD
PONDICHERRY

SBG/GA-FND-20KVA